Hard Seat & Soft Seat/Tip

5030/5130 SERIES

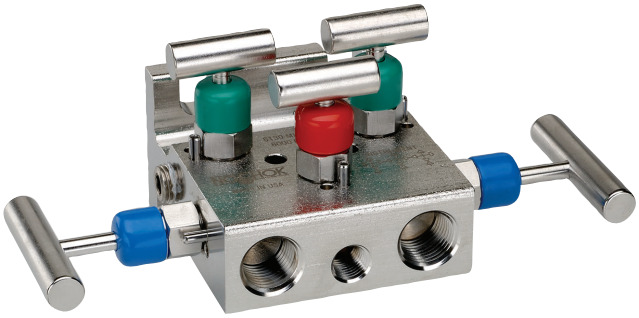

Flare Pattern™ option

- Designed for use with differential pressure transmitters incorporating two isolation valves, two equalizing valves and a vent valve required in natural gas applications
- Flare Pattern™ valve configuration provides maximum clearance for fingers during operation
- Soft tip valves feature a patented Delrin® non-rotating soft tip stem, and a back-up metal-to-metal seal **(U.S. Patent 6,820,857)**
- Available in block, single flange, or double flange connection for remote or direct installation
- 100% helium leak tested to 1 x 10^{-4} ml/s for performance and reliability
- 5130 Series valves also feature a replaceable Delrin® seat, and straight through porting for bidirectional, high capacity flow and easy roddable cleaning of the block valves
- Blow-out proof stem provides a secondary stem seal in the full open position
- FKM o-ring seal and PTFE back-up ring below the stem threads to protect from corrosion and galling; PTFE or Graphite packing optional
- One-piece bonnet with a metal-to-metal seal to the valve body below the bonnet threads
- Slotted spring pin to prevent accidental loosening
- Patented body-to-bonnet, metal-to-metal seal is designed to significantly increase the pressure range of the valve **(U.S. Patent 7,758,014)**

Flow Schematic

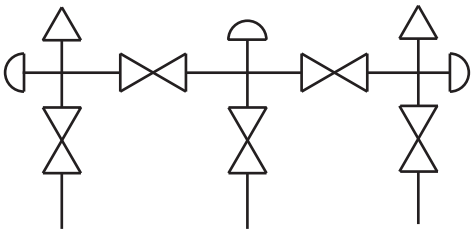

SPECIFICATIONS

Materials	Zinc-Nickel plated Carbon Steel, electropolished 316 Stainless Steel*
Connection	Flange-flange, 1/2" NPT-flange, 1/2" NPT-1/2" NPT
Pressure ratings**	Hard seat: 10,000 psi @ 200° F Soft seat/tip: 6,000 psi @ 200 °F
Orifice size	0.187"
Flow coefficient	Hard seat: C_V 0.44 Soft seat/tip: C_V 0.76
Stem seal & type	All 316 Stainless Steel stems with FKM o-ring and PTFE back-up ring below the threads.
Additional features	Two static (test) ports, color coded vinyl bonnet and stem dust cap, patented soft seat/tip stem design on equalizing and vent valves
Options	Panel mountings, o-ring materials, handles, packings, regulating stem and stem tips
Weight	Approximately 4.2 lb. without flange Approximately 6.0 lb. with flange

* All 316SS products meet the requirements of NACE MR0175/ISO 15156-3.
** If a packing option is chosen, maximum pressure rating is 6,000 psi. Refer to the "Pressure vs.Temperature: Packing Style with Compatible Fluid" chart at the back of this catalog.

For NOSHOK Valves with Steel valve types:

WARNING: This product can expose you to chemicals including Lead, which is known to the State of California to cause cancer and birth defects or other reproductive harm. For more information go to www.P65Warnings.ca.gov

For NOSHOK Valves with Stainless Steel valve types:

WARNING: This product can expose you to chemicals including Chromium (VI) and Nickel, which are known to the State of California to cause cancer and birth defects or other reproductive harm. For more information go to www.P65Warnings.ca.gov

NOTE: All NOSHOK valve products conform to the MSS SP-99 instrument valves standards, and valves supplied with packing also conform to MSS SP-132 compression packing systems for instrument valves standard.

SERIES	5	5-valve				
SEATS	0	Hard seat	1	Soft seat/tip		
PROCESS TYPE	3	Natural gas flow				
CONNECTION	0	1/2" NPT or flange				
VALVE TYPES	MFC	Flange-Female, Steel	MFS	Flange-Female, Stainless Steel	MMC	Flange-Flange, Steel
	FFC	Female-Female, Steel	FFS	Female-Female, Stainless Steel	MMS	Flange-Flange, Stainless Steel

Please consult your local NOSHOK Distributor or NOSHOK, Inc. for availability and delivery information.

EXAMPLE **5 1 3 0 – MFC**

Series..... 5-valve
Seat.....Soft seat/tip
Process type..... Natural gas flow
Connection.....1/2" NPT standard
Valve type.....Flange-female, Steel

To meet all of your specific application requirements, the following **additional options** are available for these manifold valves. To order all or any of these options, simply add them to the part number as shown in the diagram below.

NOTE 1: The example shown includes ALL possible additional options. Please include ONLY the options required for your application when building your part number. (EXAMPLE: 5130-MFC-P1)

NOTE 2: When a packing option is selected, an o-ring option is NOT available.

NOTE 3: The standard o-ring in all the NOSHOK manifold valves is FKM and T1 hard non-rotating (316SS standard) stem tip is the only option available for the Isolation valves on the 5130 Series. All other stem tip options are available for the equalize and vent valves.

ORDERING INFORMATION - ADDITIONAL OPTIONS								
BODY CONFIGURATION	FP	Flare Pattern™						
SOFT SEATS	PK1	PEEK	KF1	PCTFE				
PACKINGS†	P1	PTFE	P2	Graphite**				
STEM TIPS	T1	Non-rotating (316 Stainless)	T4	PEEK***	T7	Ball (ceramic)**	T10	Regulating Delrin®***
	T2	Delrin® (Acetal)***	T5	Ball (440C Stainless)**	T8	Ball (Monel)**	T11	Regulating PCTFE***
	T3	PCTFE***	T6	Ball (carbide)**	T9	Non-rotating regulating (316 Stainless)**	T12	Regulating PEEK***
O-RINGS*	EM1	EPDM	KZ1	FFKM (Kalrez® 3018 or equivalent)			NB1	NBR
HANDLES	HL1	1-13/16" Mini "T"	HL3	1" Round knurled	HL4	1-3/8" Phenolic	HL5	1-3/4" Phenolic

Please consult your local NOSHOK Distributor or NOSHOK, Inc. for availability and delivery information.

* Other o-ring materials available on request.
** For 5030 only.
*** For 5130 only.

† If a packing option is chosen, maximum pressure rating is 6,000 psi. Refer to the"Pressure vs. Temperature: Packing Style with Compatible Fluid" chart at the back of this catalog.

Please note that the standard o-ring in all the NOSHOK valves is FKM and the standard handles are isolation "T" handles (HL2) and equalizing & vent 1-3/8" mini "T" handles (HL7).

The handle material will always match the material of the valve, unless otherwise specified. For example, handles on the 5130-MFC will be Steel. When only the standard configuration is needed, no additional designations are necessary. Please consult the factory for special application requests.

EXAMPLE with Additional Options **5 1 3 0 – MFC – FP – PK1 – P1 – T1**

Series..... 5-valve
Seat.....Soft seat/tip
Process type..... Natural gas flow
Connection.....1/2" NPT standard
Valve type.....Flange-female, Steel
Body configuration .....Flare Pattern™
Soft seat ..... PEEK
Packing.....PTFE
Stem tip ..... Non-rotating

Dimensions

Flange-Flange

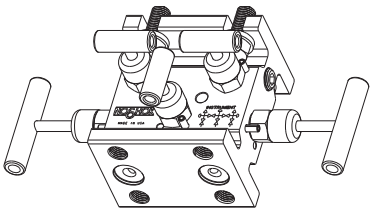

Top View

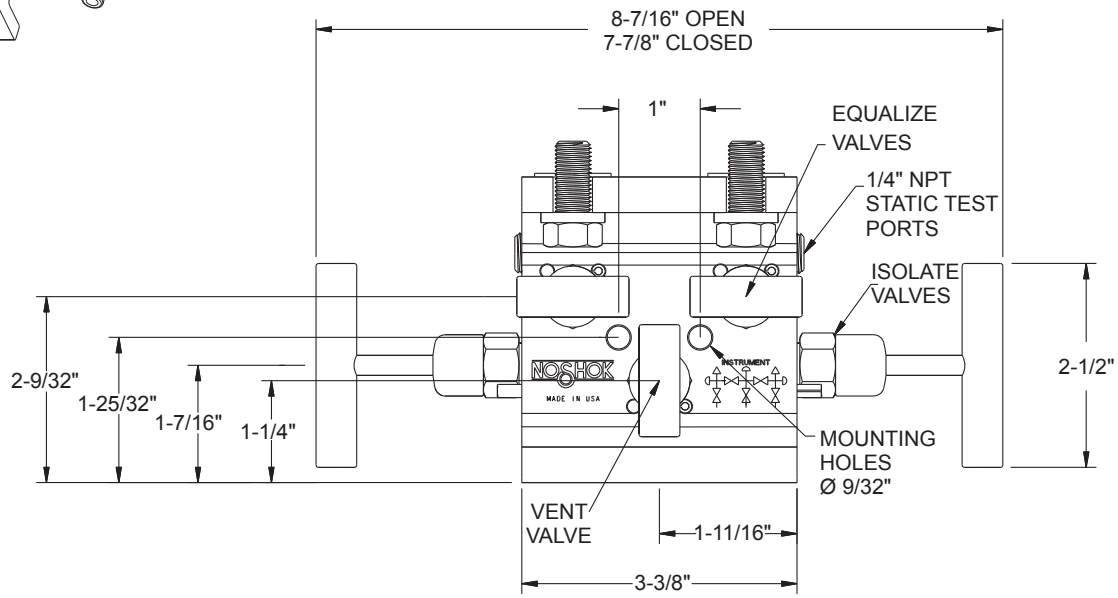

Front View

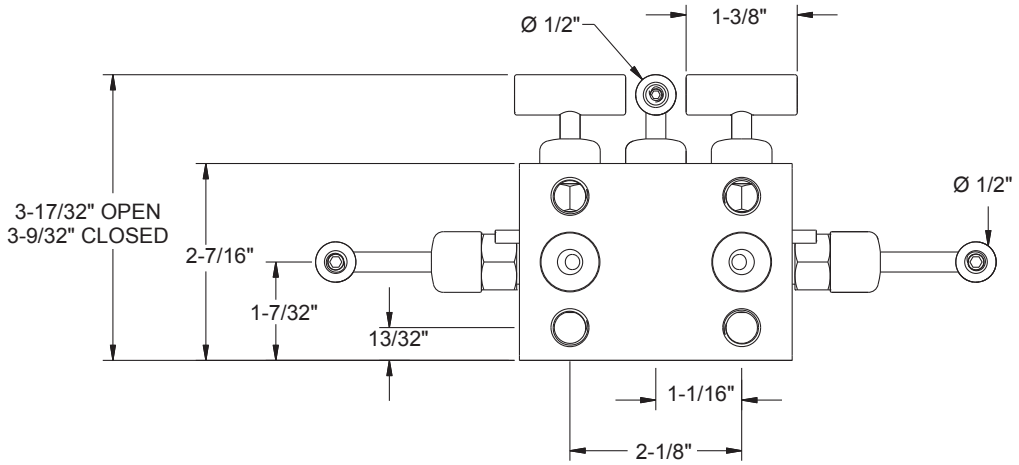

Side View

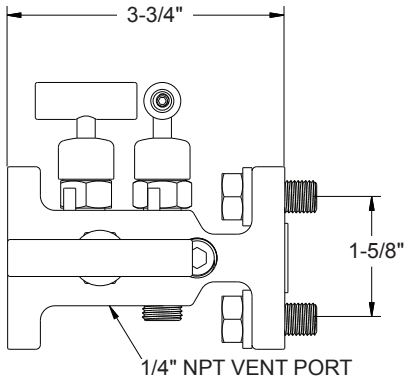

Flange-Female

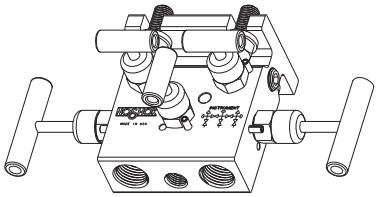

Top View

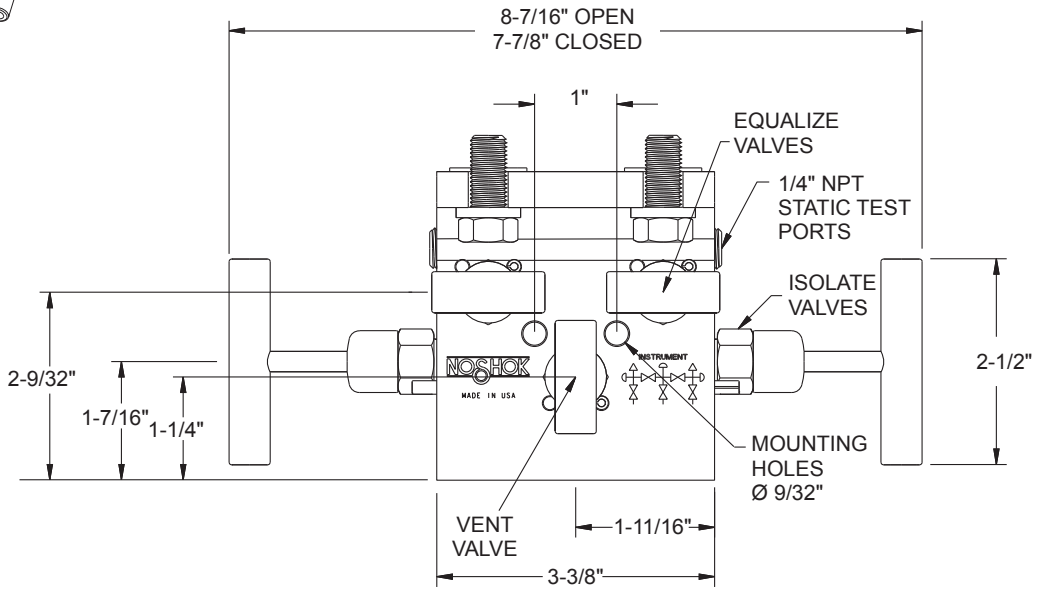

Front View

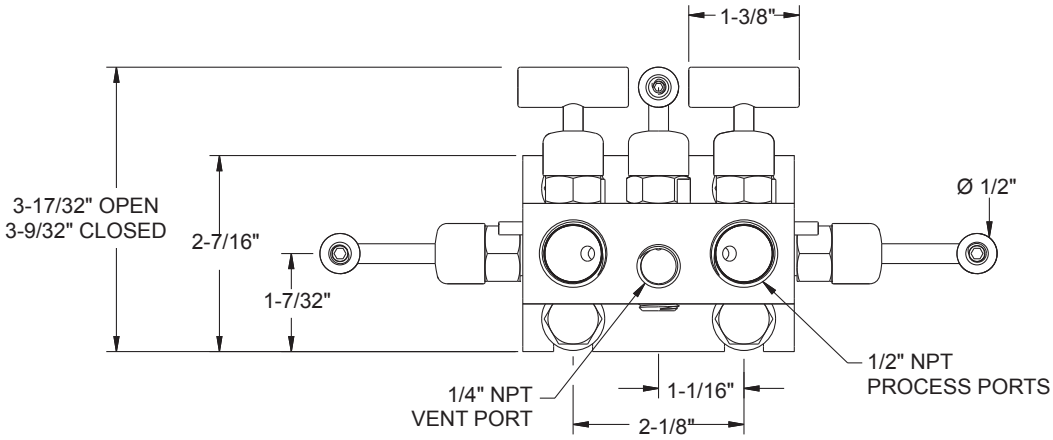

Side View

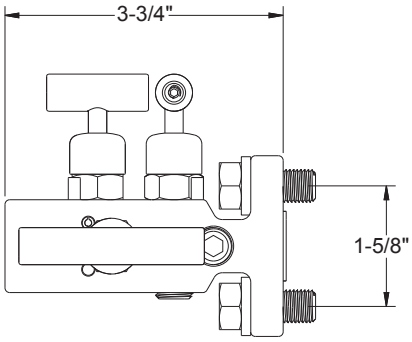

Dimensions

Female-Female

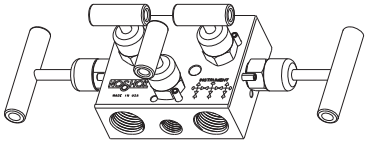

Top View

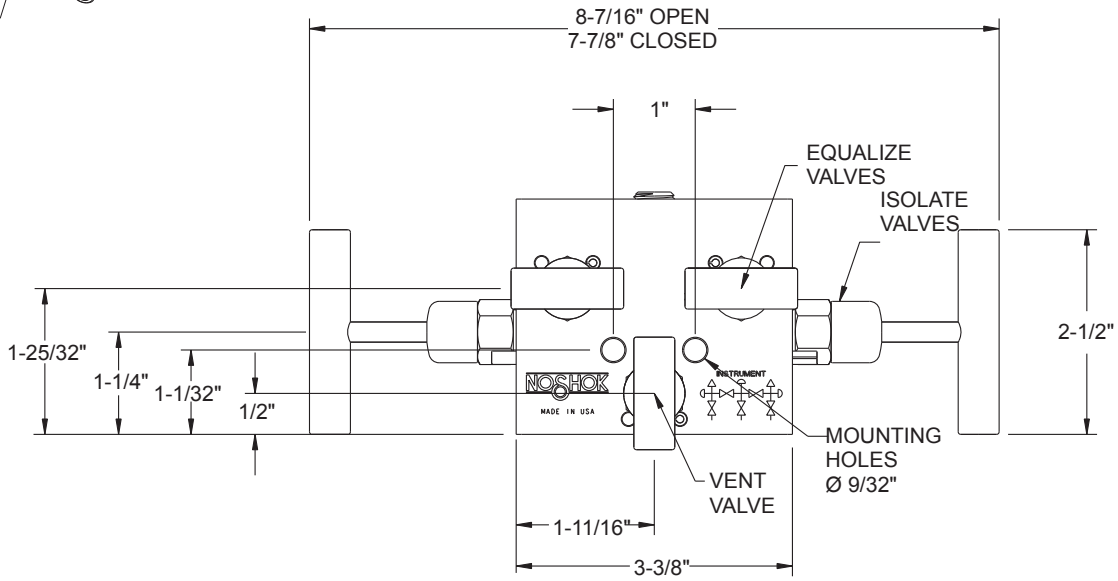

Front View

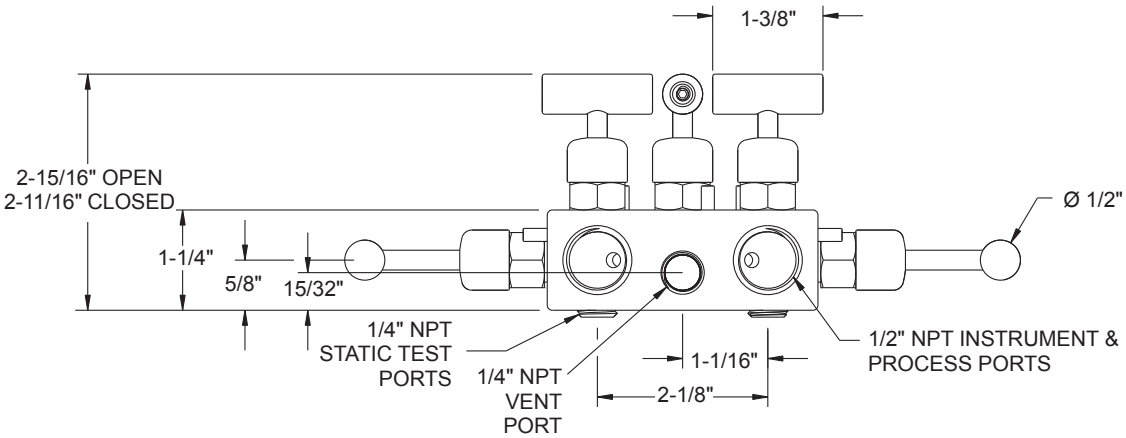

Side View

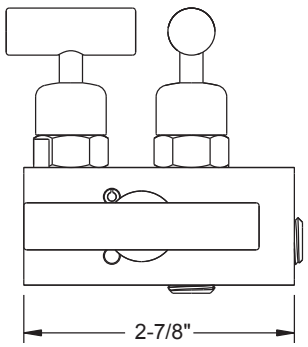

For panel mount or packing dimensions, see pg. 66.

Hard Seat

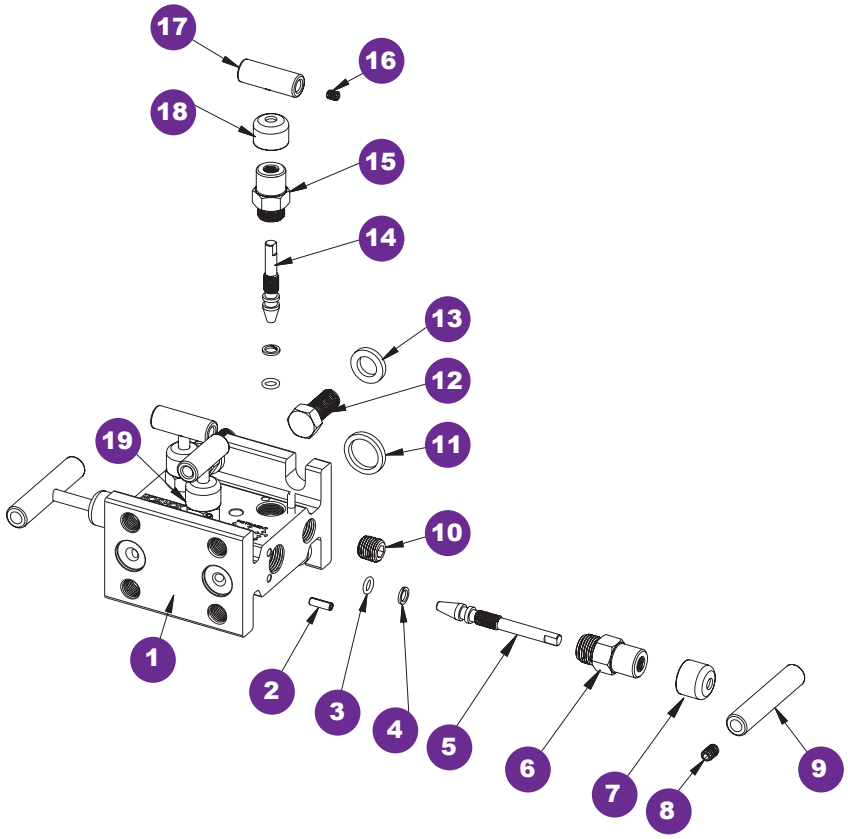

1 Valve body
2 Slotted spring pin
3 FKM o-ring
4 PTFE back-up ring
5 Valve stem
6 Valve bonnet
7 Blue dust cap
8 Set screw
9 Valve “T” handle
10 Plug
11 Gasket ring
12 Head bolt
13 Washer
14 Mini valve stem
15 Mini valve bonnet
16 Set screw
17 Mini valve “T” handle
18 Green dust cap
19 Red dust cap

Soft Seat

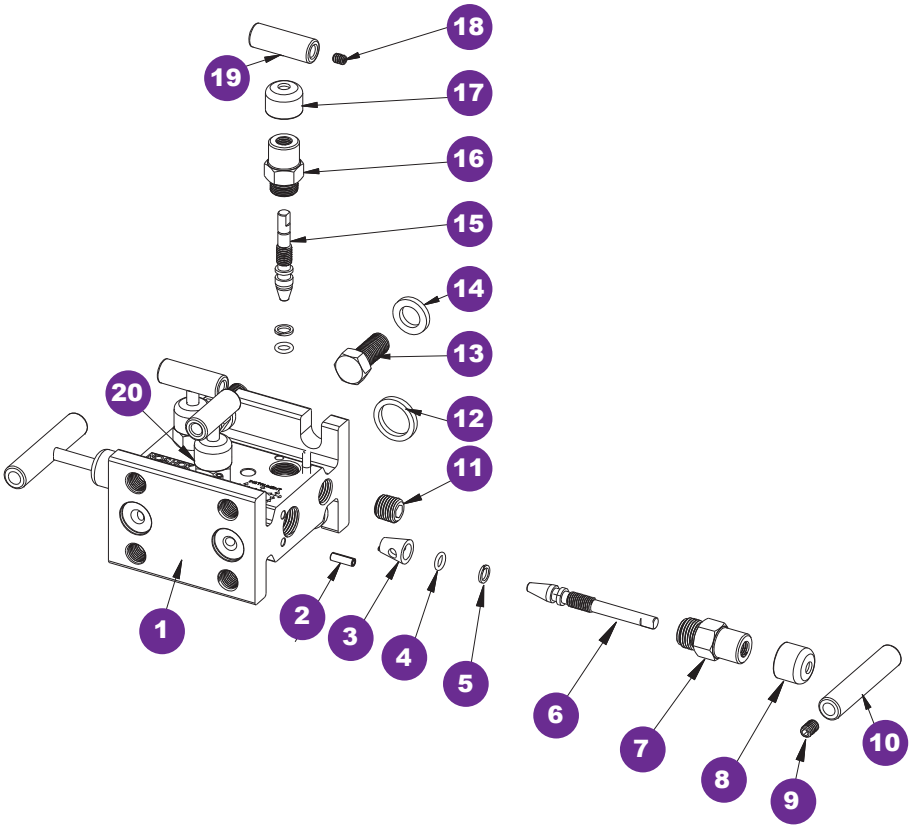

1 Valve body
2 Slotted spring pin
3 Delrin® seat
4 FKM o-ring
5 PTFE back-up ring
6 Valve stem
7 Valve bonnet
8 Blue dust cap
9 Set screw
10 Valve “T” handle
11 Plug
12 Gasket ring
13 Head bolt
14 Washer
15 Soft tip stem
16 Mini valve bonnet
17 Green dust cap
18 Set screw
19 Mini valve “T” handle
20 Red dust cap

Dimensions

Flare Pattern™ Flange-Flange

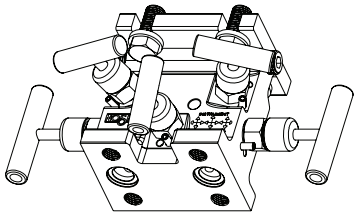

Top View

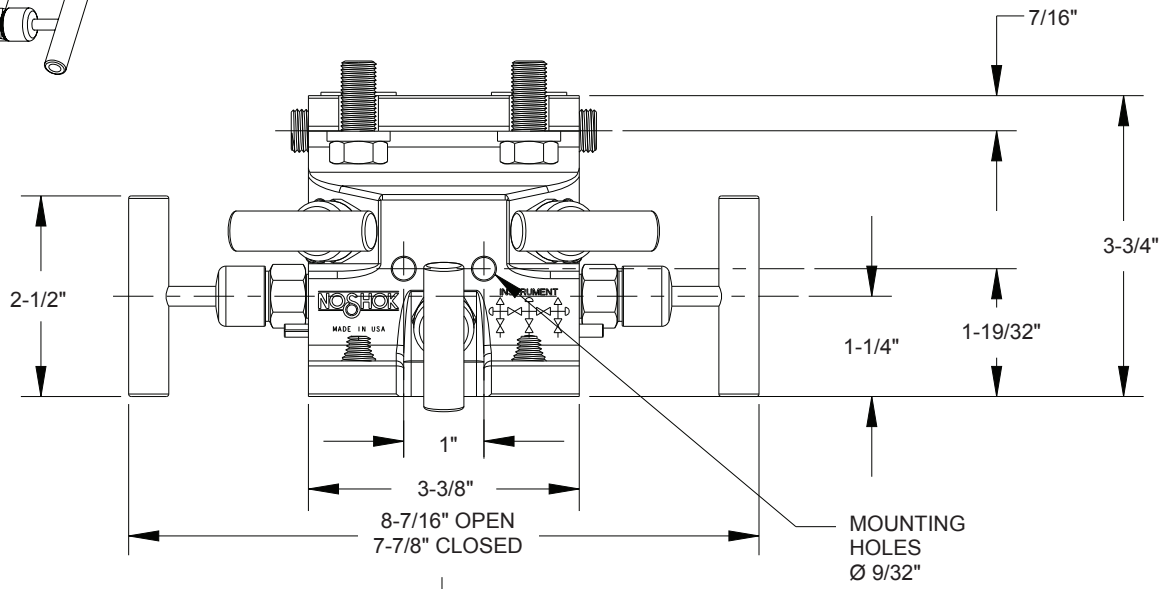

Front View

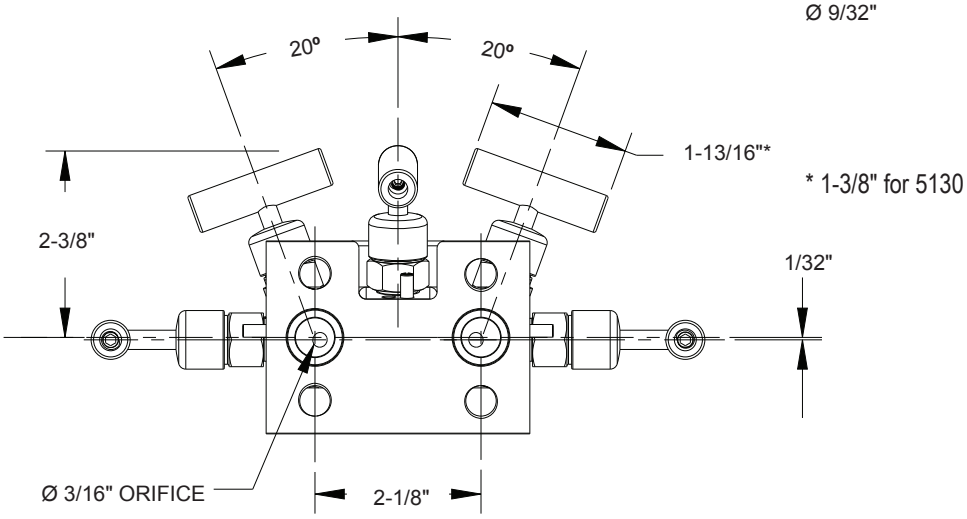

Side View

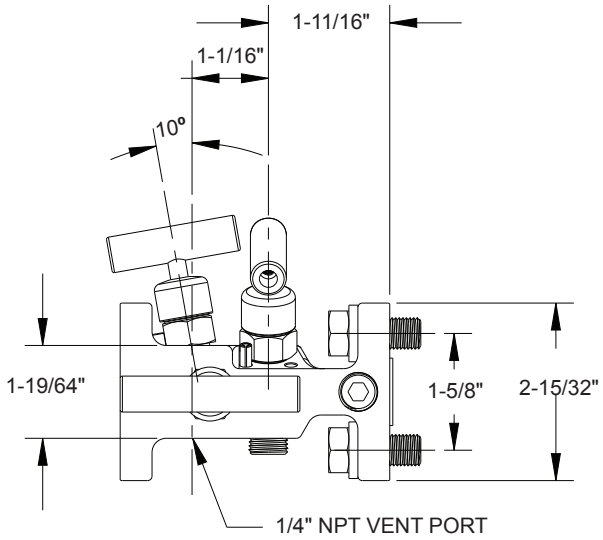

Flare Pattern™ Flange-Female

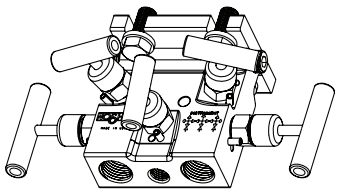

Top View

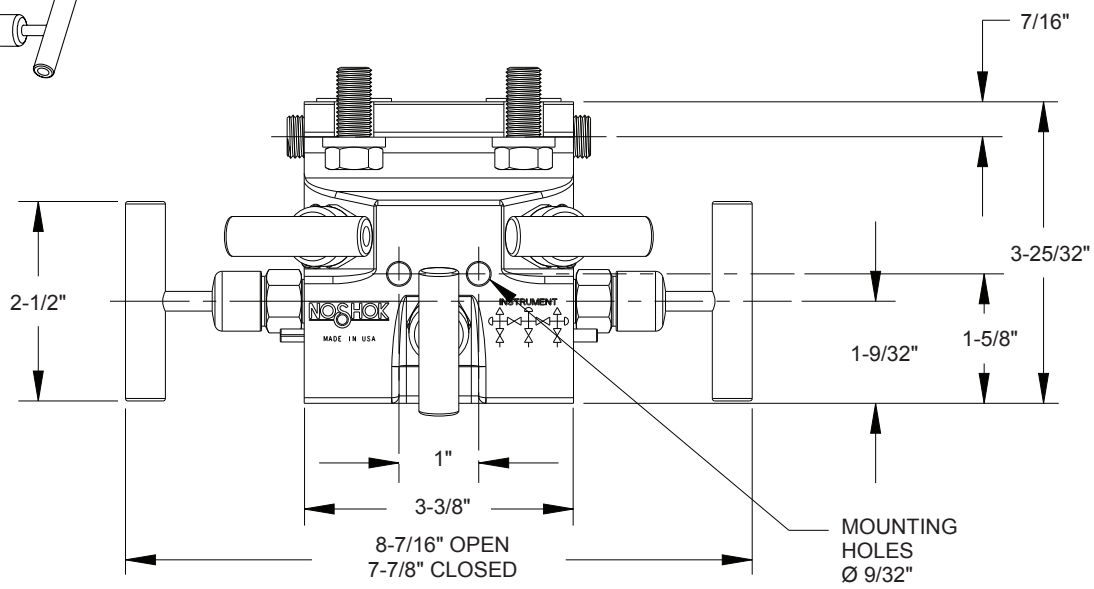

Front View

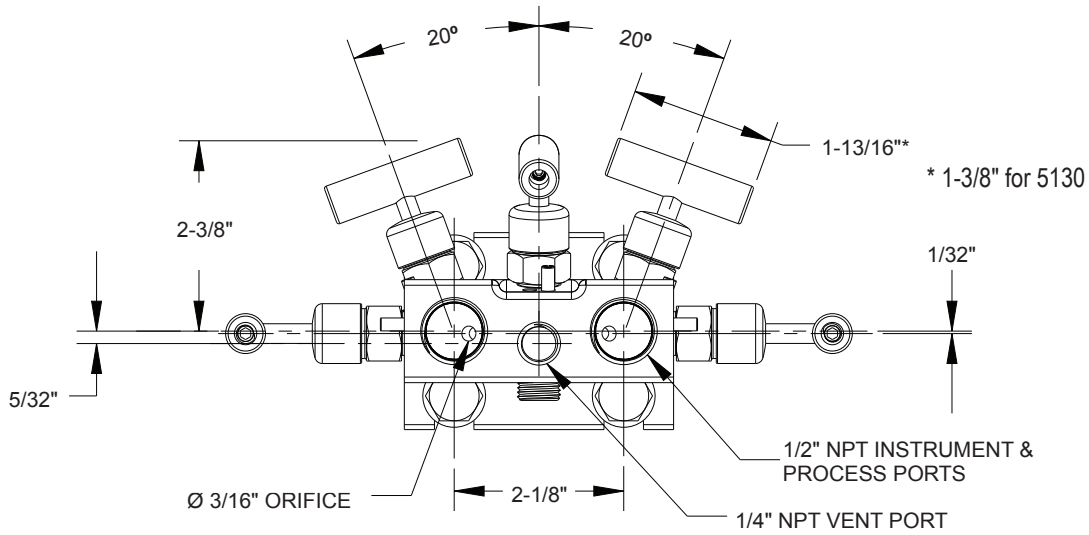

Side View

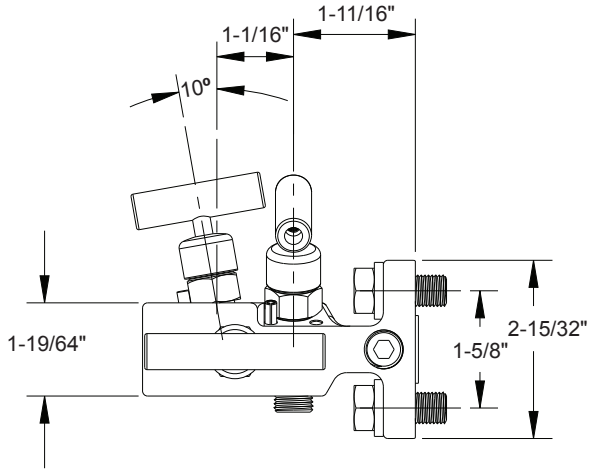

Dimensions

Flare Pattern™ Female-Female

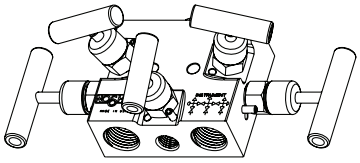

Top View

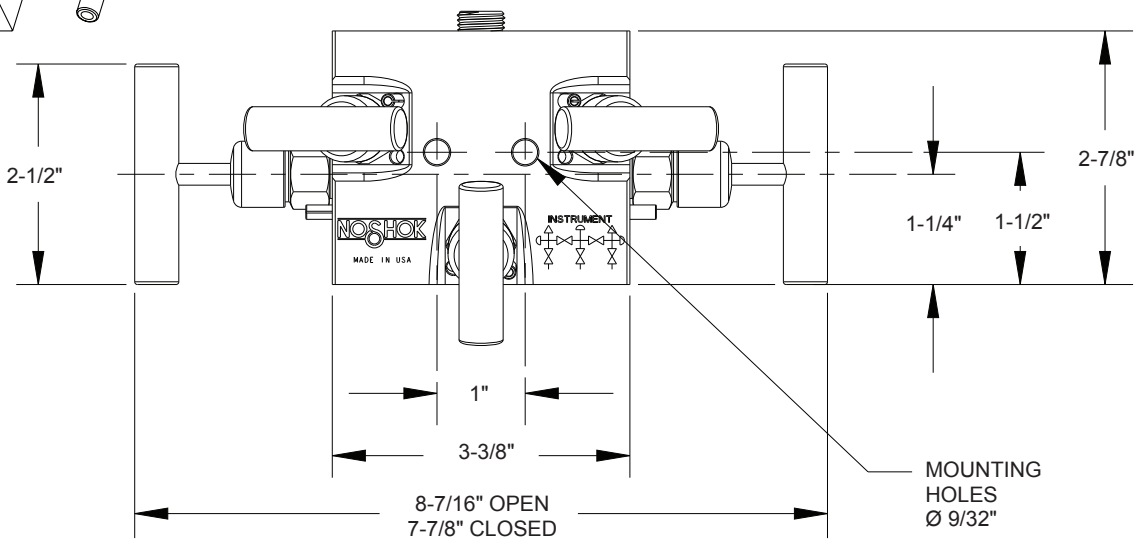

Front View

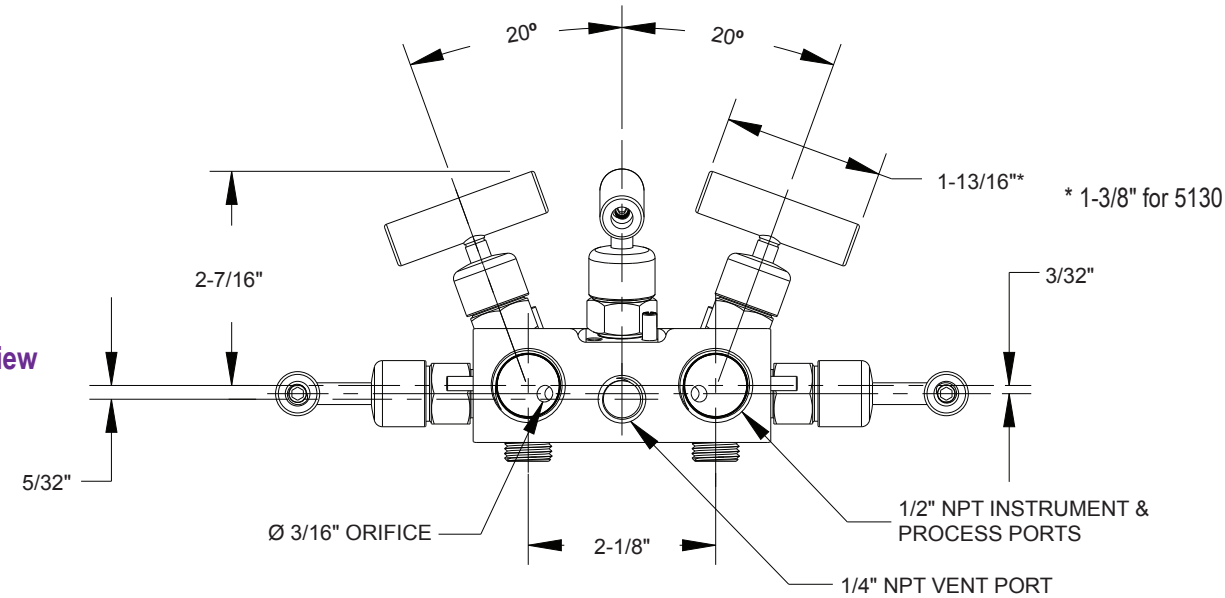

Side View

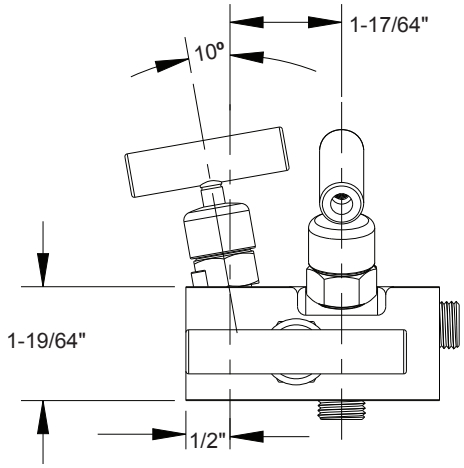

For panel mount or packing dimensions, see pg. 66.

Hard Seat

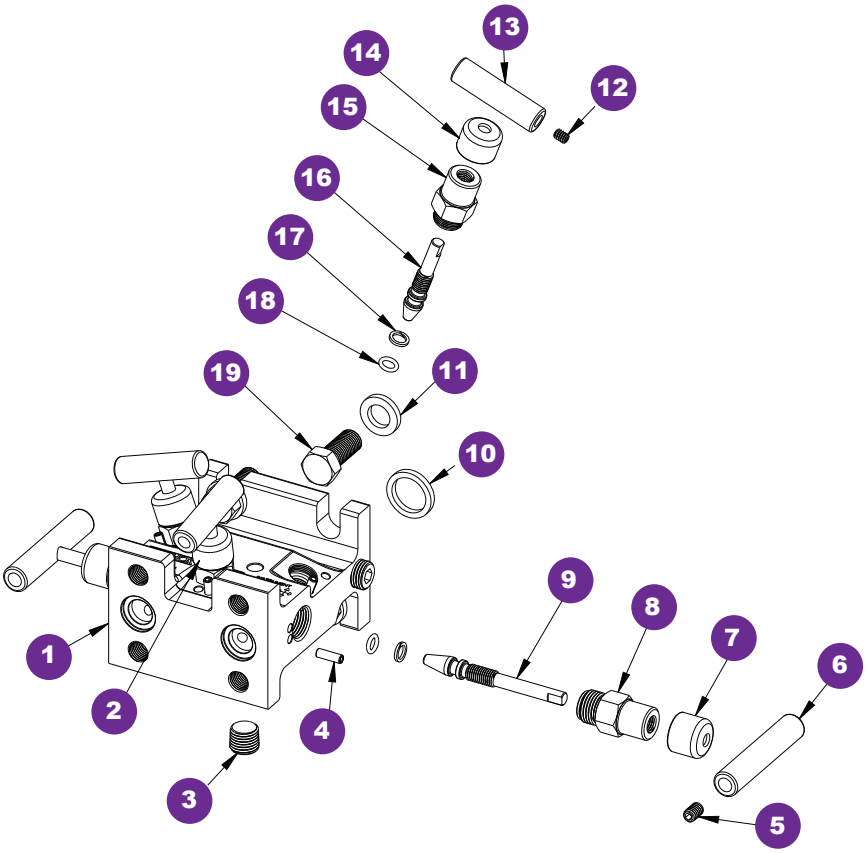

1 Flare Pattern™ valve body
2 Red dust cap
3 Plug
4 Slotted spring pin
5 Set screw
6 Valve “T” handle
7 Blue dust cap
8 Valve bonnet
9 Valve stem
10 Gasket ring
11 Washer
12 Set screw
13 Mini valve “T” handle
14 Green dust cap
15 PTFE back-up ring
16 Valve stem
17 PTFE back-up ring
18 FKM o-ring
19 Head bolt

Soft Seat

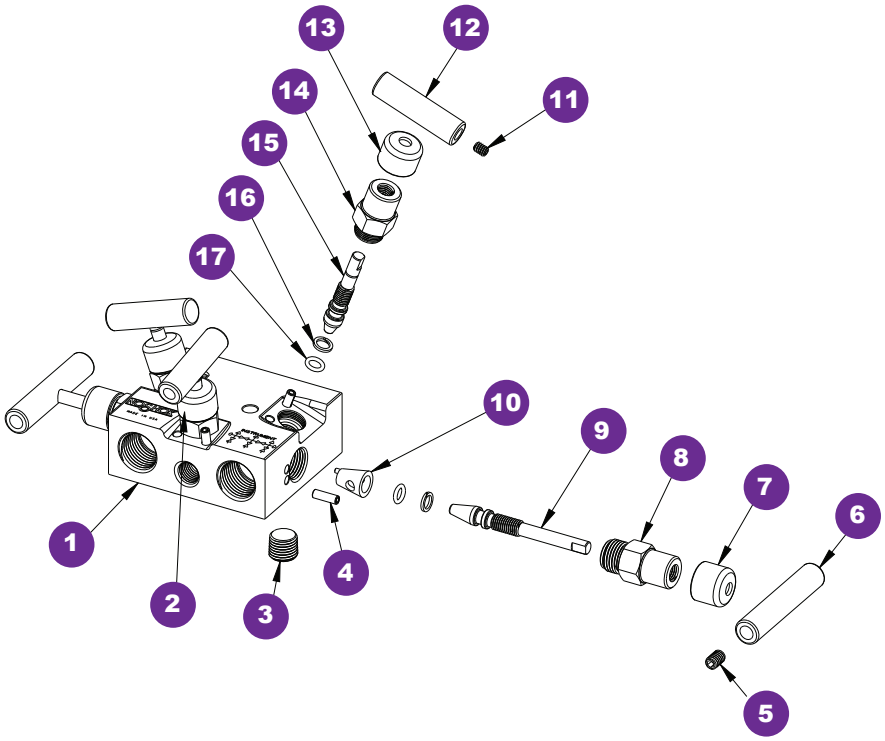

1 Flare Pattern™ valve body
2 Red dust cap
3 Plug
4 Slotted spring pin
5 Set screw
6 Valve “T” handle
7 Blue dust cap
8 Valve bonnet
9 Valve stem
10 Soft seat
11 Set screw
12 Mini valve “T” handle
13 Green dust cap
14 Valve bonnet
15 Soft tip stem
16 PTFE back-up ring
17 FKM o-ring